BOLTED FLANGE PLATE (BFP) MOMENT CONNECTION

Based on AISC 358-16, 341-16, 360-16

Client:		**Designed By:**	*A. Shaikhzadeh*	**Date:**	*22-Feb-21*
Job Name:		**Verified By:**		**Revision:**	*100%*

https://strenca.com

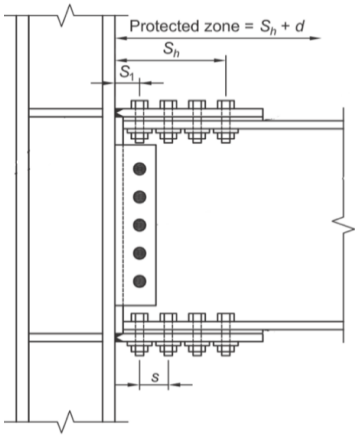

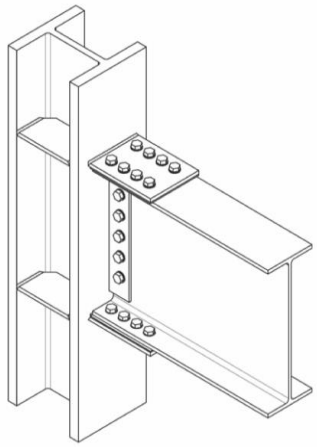

	DESIGN STATUS :	**O.K.**
	OVERALL D/C RATIO	**0.89**
	BOLT SPACING LIMITS	**O.K.**
	PREQUALIFICATION LIMITS	**O.K.**
	ASSUMED PLASTIC HINGE LOCA.	**O.K.**
FLANGE PLATES D/C	SLIP-CRITICAL	**N/A**
FLANGE PLATES D/C	BEARING & TEAROUT	**0.89**
FLANGE PLATES D/C	TENSILE YEILDING	**0.73**
FLANGE PLATES D/C	TENSILE RUPTURE	**0.74**
FLANGE PLATES D/C	BLOCK SHEAR	**0.59**
FLANGE PLATES D/C	COMPR. BUCKLING	**0.73**
FLANGE PLATES D/C	HOLES IN TENSION FLANGE	**N/A**
WEB PLATE D/C	SLIP-CRITICAL	**N/A**
WEB PLATE D/C	BEARING & TEAROUT	**0.64**
WEB PLATE D/C	SHEAR YEILDING	**0.58**
WEB PLATE D/C	SHEAR RUPTURE	**0.49**
WEB PLATE D/C	BLOCK SHEAR	**0.38**

DESIGN INPUT DATA

MATERIAL AND LOADS

STEEL YIELD STRESS, F_y	240	MPa		
STEEL FRACTURE STRESS, F_u	370	MPa		
PLASTIC HINGE ASSUMED LOCATION, $S_{h,\ assumed}$	330	mm	$_{,\ calculated}$ = 330	
MAXIMUM PROBABLE MOMENT AT PLASTIC HINGE, M_{pr}	320	kN-m	$M_{pr} = C_{pr} R_y F_y Z$	358-16 (2.4-1)
MAXIMUM PROBABLE SHEAR AT PLASTIC HINGE, V_{pr}	173	kN	$V_{pr} = 2M_{pr} / L_h + V_{gravity}$	358-16 (7.6-13)

BEAM

DEPTH OF BEAM, d	370	mm	SEE 358-16 (7.3.2) FOR COLUMN DEPTH LIMIT	
FLANGE WIDTH, b	200	mm		
FLANGE THICKNESS, t_f	10	mm		
WEB THICKNESS, t_w	8	mm		
WEIGHT PER UNIT LENGTH, w	60	kg/m		
CLEAR SPAN LEGNTH, L	4400	mm	FACE TO FACE OF COLUMNS	
LINEAR FACTORED GRAVITY LOAD, q_u	0.7	kN/m	BASED ON COMBINATION *1.2D+L+0.2S*	
TYPE OF MOMENT FRAME	IMF		INTERMEDIATE MOMENT FRAME	

TOP & BOTTOM FLANGE PLATES PL 380 x 200 x 30

FLANGE PLATE THICKNESS, t_{fp}	30	mm		
FLAGNE PLATE WIDTH, b_{fp}	200	mm		
NUMBER OF BOLT ROWS, n_f	5		TWO BOLTS PER EACH ROW (SEE NOTE 4)	
BOLT SIZE, d_{bf}	20	mm		
BOLT GRADE	10.9		A490	
EDGE DISTANCE OF FIRST BOLT ROW, S_1	50	mm	**O.K.**	360-16 (Table J3.4)
EDGE DISTANCE OF LAST BOLT ROW, S_L	50	mm		
SPACING OF BOLT ROWS, s_f	70	mm	**O.K.**	360-16 (J3-3)
TRANSVERSE SPACING OF BOLTS, s_{tra}	50	mm		

DESIGN AS SLIP-CRITICAL		NO			
SURFACE CLASS TYPE	NOT REQUIRED	B	μ =	0.5	360-16 (J3-4)
NUMBER OF FILLERS	NOT REQUIRED	0	h_f =	1.00	360-16 (J3-4)
NUMBER OF SLIP PLANES, n_s	NOT REQUIRED	1			

(cont'd)

SINGLE WEB PLATE

PL 230 x 100 x 10

WEB PLATE THICKNESS, t_{wp}		10	mm		
WEB PLATE WIDTH, b_{wp}		100	mm		
NUMBER OF BOLTS, n_{bw}		4			
BOLT SIZE, d_{bw}		16	mm		
BOLT GRADE		10.9		A490	
EDGE DISTANCE OF FIRST AND LOAST BOLTS, s_1		40	mm	O.K.	360-16 (Table J3.4)
SPACING OF BOLTS, s_w		50	mm	O.K.	360-16 (J3-3)
DESIGN AS SLIP-CRITICAL		NO			
SURFACE CLASS TYPE	NOT REQUIRED	B		μ = 0.5	360-16 (J3-4)
NUMBER OF FILLERS	NOT REQUIRED	0		h_f = 1.00	360-16 (J3-4)
NUMBER OF SLIP PLANES, n_s	NOT REQUIRED	1			

PREQUALIFICATION LIMITS CONTROL

$d \leq 1000$ mm	O.K.	Control of beam depth	358-16 (7.3.1)
$t_f \leq 25$ mm	O.K.	Control of beam flange thickness (see note 9)	358-16 (7.3.1)
$w \leq 223$ kg/m	O.K.	Control of beam weight (see note 9)	358-16 (7.3.1)
$L_{bolt\ group} \leq d$	O.K.	Control of bolt group length	358-16 (7.5.4)
d_{bf} & $d_{bw} \leq 27$	O.K.	Control of bolt diameter	358-16 (7.5.4)
$L / d \leq 7$	O.K.	Control of clear span-to-depth ratio of the beam	358-16 (7.3.1)

BOLT STRENGHT

Flange Bolts

F_u	1000	MPa	Ultimate tensile strength	358-16 (7.3.1)
$F_{nt} = 0.75 F_u$	750	MPa	Nominal tensile strength	360-16 (Table J3.2)
$F_{nv} = 0.45 F_u$	450	MPa	Nominal shear strength (threads excluded from shear planes)	360-16 (Table J3.2)
A_b	314	mm^2	Bolt cross sectional area	
$\phi R_{nt} = 0.75 F_{nt} A_b$	177	kN	Tension force capacity of each bolt	
$\phi R_{nv} = 0.45 F_{nt} A_b$	106	kN	Shear force capacity of each bolt	

Web Bolts

F_u	1000	MPa	Ultimate tensile strength	358-16 (7.3.1)
$F_{nt} = 0.75 F_u$	750	MPa	Nominal tensile strength	360-16 (Table J3.2)
$F_{nv} = 0.45 F_u$	450	MPa	Nominal shear strength (threads excluded from shear planes)	360-16 (Table J3.2)
A_b	201	mm^2	Bolt cross sectional area	
$\phi R_{nt} = 0.75 F_{nt} A_b$	113	kN	Tension force capacity of each bolt	
$\phi R_{nv} = 0.45 F_{nt} A_b$	68	kN	Shear force capacity of each bolt	

PLASTIC HINGE FORCES AT COLUMN FACE

$S_h = S_1 + s(n - 1)$	330	mm	Location of plastic hinge from column face	358-16 (7.6.5)
$S_{h,\ assumed}$	330	mm	Assumed location of plastic hinge from column face	
Status	O.K.		Control of assumed location of plastic hinge	
$L_{protected} = S_h + d$	700	mm	Length of protected zone from column face	
$L_h = L - 2S_h$	3740	mm	Length of beam between the two plastic hinges	
$M_u = M_{pr} + V_{pr} S_h + q_u S_h^2/2$	377	kN-m	Moment expected at the face of column flange	358-16 (7.6.6)
$V_u = V_{pr} + q_u S_h$	173	kN	Shear expected at the face of column flange	358-16 (7.6.13)

TOP & BOTTOM FLAGNE PLATES

Tension/Compression Force & Plate Length

$d_{plates} = d + t_{fp}$	400	mm	Center to center distance of top and bottom flange plates

$F_{pr} = M_u / d_{plates}$	943	kN	Couple forces due to the moment	358-16 (7.6-7)
L_{fp}	380	mm	Flange plate length	

(cont'd)

Slip-Critical Strength

D_u	N/A			360-16 (J3-3)
T_b	N/A	kN	Minimum bolt pretension force	360-16 (Table J3.1M)
ϕ	N/A		Standard and short-slotted hole (see note 5)	358-16 (7.5.4) & 360-16 (J3-4)
$\phi r_n = \mu D_u h_f T_b n_s$	N/A	kN	Slip-critical strength for one bolt	360-16 (J3-4)
$\phi R_n = \phi r_n n_{bf}$	N/A	kN	Slip-critical strength for all bolts	
Status	**N/A**			
D/C	**N/A**		Demand / capacity ratio	

Bearing Deformation & Tearout Strength

$d_{hole} = d_{bf} + 3$	23	mm	Hole diameter	
$l_{c\,(edge)} = l_e - 0.5\, d_{hole}$	39	mm	For edge holes	
$l_{c\,(other)} = s_f - d_{hole}$	47	mm	For interior holes	
$\phi r_n = 0.75\,(2.4)\, d_{bf}\, t_{min}\, F_u$	400	kN	Bearing deformation strength of each bolt hole	360-16 (J3-6a)
$\phi r_n = 0.75(1.2)\, l_{c\,(edge)}\, t_{min}\, F_u$	385	kN	Tearout strength of each edge hole	360-16 (J3-6c)
$\phi r_n = 0.75(1.2)\, l_{c\,(other)}\, t_{min}\, F_u$	470	kN	Tearout strength of each interior hole	360-16 (J3-6c)
ϕR_n	1060	kN	Total Connection Strength	
Status	**O.K.**			
D/C	**0.89**		Demand / capacity ratio	

Control of Tensile Yielding

$A_g = b_{fp}\, t_{fp}$	6000	mm²	Gross area of flange plate	
$\phi R_n = 0.9\, F_y\, A_g$	1296	kN	Tensile yielding strength	360-16 (J4.1)
Status	**O.K.**			
D/C	**0.73**		Demand / capacity ratio	

Control of Tensile Rupture

$A_n = A_g - 2(d_{hole}\, t_{fp})$	4620	mm²	Net area of flange plate	
$\phi R_n = 0.75\, F_u\, A_n$	1282	kN	Tensile rupture strength (U = 1.0)	360-16 (J4.1)
Status	**O.K.**			
D/C	**0.74**		Demand / capacity ratio	

Control of Block Shear (Case 1) See note 10 360-16 (J4.3)

A_{nv}	13590	mm²	Net shear area	
A_{nt}	810	mm²	Net tension area	
A_{gv}	19800	mm²	Gross shear area	
ϕR_n	2363	kN	Block shear strength	
Status	**O.K.**			
D/C	**0.40**		Demand / capacity ratio	

Control of Block Shear (Case 2) See note 10 360-16 (J4.3)

A_{nv}	6795	mm²	Net shear area	
A_{nt}	1905	mm²	Net tension area	
A_{gv}	9900	mm²	Gross shear area	
ϕR_n	1598	kN	Block shear strength	
Status	**O.K.**			
D/C	**0.59**		Demand / capacity ratio	

Control of Compression Buckling 360-16 (J4.4)

$KL = 0.65\, S_1$	33	mm		Effective length	358-16 (7.6-12, User Note)
$r = (I / A)^{0.5}$	9	mm		Radius of gyration	
KL/r	4		≤	25 (See Note 3)	
$\phi R_n = 0.9\, F_y\, A_g$	1296	kN		Compression buckling strength	
Status	**O.K.**				
D/C	**0.73**			Demand / capacity ratio	

(cont'd)

SINGLE WEB PLATE

Shear Force

V_u	173	kN	Shear force at the face of column flange	358-16 (7.6-7)
L_{wp}	230	mm	Web plate length	

Slip-Critical Strength

D_u	N/A			360-16 (J3-3)
T_b	N/A	kN	Minimum bolt pretension force	360-16 (Table J3.1M)
ϕ	N/A		Standard and short-slotted hole (see note 5)	358-16 (7.5.4) & 360-16 (J3-4)
$\phi r_n = \mu D_u h_f T_b n_s$	N/A	kN	Slip-critical strength for one bolt	360-16 (J3-4)
$\phi R_n = \phi r_n n_{bw}$	N/A	kN	Slip-critical strength for all bolts	
Status	**N/A**			
D/C	**N/A**		Demand / capacity ratio	

Bearing Deformation & Tearout Strength

$d_{hole} = d_{bf} + 3$	19	mm	Hole diameter	
$l_{c\,(edge)} = l_e - 0.5\, d_{hole}$	31	mm	For edge holes	
$l_{c\,(other)} = s_w - d_{hole}$	31	mm	For interior holes	
$\phi r_n = 0.75\,(2.4)\, d_{bw}\, t_{min}\, F_u$	107	kN	Bearing deformation strength of each bolt hole	360-16 (J3-6a)
$\phi r_n = 0.75(1.2)\, l_{c\,(edge)}\, t_{min}\, F_u$	102	kN	Tearout strength of each edge hole	360-16 (J3-6c)
$\phi r_n = 0.75(1.2)\, l_{c\,(other)}\, t_{min}\, F_u$	103	kN	Tearout strength of each interior hole	360-16 (J3-6c)
ϕR_n	271	kN	Total Connection Strength	
Status	**O.K.**			
D/C	**0.64**		Demand / capacity ratio	

Control of Shear Yeilding

$A_{gv} = L_{wp}\, t_{wp}$	2300	mm²	Gross shear area of web plate	
$\phi R_n = 0.9\,(0.6\, F_y)\, A_{gv}$	298	kN	Shear yielding strength	360-16 (J4.3)
Status	**O.K.**			
D/C	**0.58**		Demand / capacity ratio	

Control of Shear Rupture

$A_{nv} = A_{gv} - (d_{hole}\, t_{wp})$	2110	mm²	Net shear area of web plate	
$\phi R_n = 0.75\,(0.6\, F_u)\, A_{nv}$	351	kN	Shear rupture strength	360-16 (J4.4)
Status	**O.K.**			
D/C	**0.49**		Demand / capacity ratio	

Control of Block Shear

360-16 (J4.3)

A_{nv}	1235	mm²	Net shear area	
A_{nt}	905	mm²	Net tension area	
A_{gv}	1900	mm²	Gross shear area	
ϕR_n	456	kN	Block shear strength	
Status	**O.K.**			
D/C	**0.38**		Demand / capacity ratio	

STRENGTH REDUCTION IN TENSION FLANGE

$A_{fg} = b\, t_f$	2000	mm²	Gross area of tension flange	
$A_{fn} = A_{fg} - 2(d_{hole}\, t_f)$	1540	mm²	Net area of tension flange	
Y_t	1.0		1.0 for $F_y / F_u \leq 0.8$	360-16 (F13.1)

$F_u A_{fn}$	570	kN		
$F_y A_{fg}$	480	kN		
S_x	855225	mm^3	Section modulus of beam	
$M_n = F_u A_{fn} S_x / A_{fg}$	N/A	kN-m	No strength reduction is required	360-16 (F13-1)

(cont'd)

NOTES:

1- N/A = Not Applicable

2- The code specifies that threads shall be excluded from the shear plane. However, for a margin of saftey, here it has been assumed that threads are not excluded from shear planes. Thus, shear stress of bolts is considered to be 0.45Fu .

3- If *KL/r > 25* , provision of chapter E must be used for control of compression buckling. (360-16 J4.4)

4- Bolts shall be arranged symmetrically about the axes of the beam and shall be limited to two bolts per row in the flange plate connections. (358-16 7.5.4)

5- Standard holes shall be used in beam flanges. Holes in flange plates shall be standard or oversized holes. (358-16 7.5.4)

6- Flange plates shall be connected to the column flange using CJP groove welds and shall be considered demand critical. (358-16 7.5.2)

7- The single-plate shear connection shall be welded to the column flange. The singleplate to column-flange connection shall consist of CJP groove welds, two-sided PJP groove welds, or two-sided fillet welds. (358-16 7.5.3)

8- The beam shall be connected to the flange of the column. (358-16 7.3.2)

9- There is no limit on weight per length and flange thickness of columns. (358-16 7.3.2)

10- There are two cases for which block shear rupture must be checked. The first case involves the tearout of the block between the two rows of the holes in the flange plate. The second case involves the tearout of the two blocks outside the two rows of bolt holes in the flange plate.